LOCKING PIECE FOR AIR VENT AND OIL DRAIN IN ACCORDANCE WITH DIN 42558

KTC ENERJİ ELEKTRİK DIŞ TİC. A.Ş

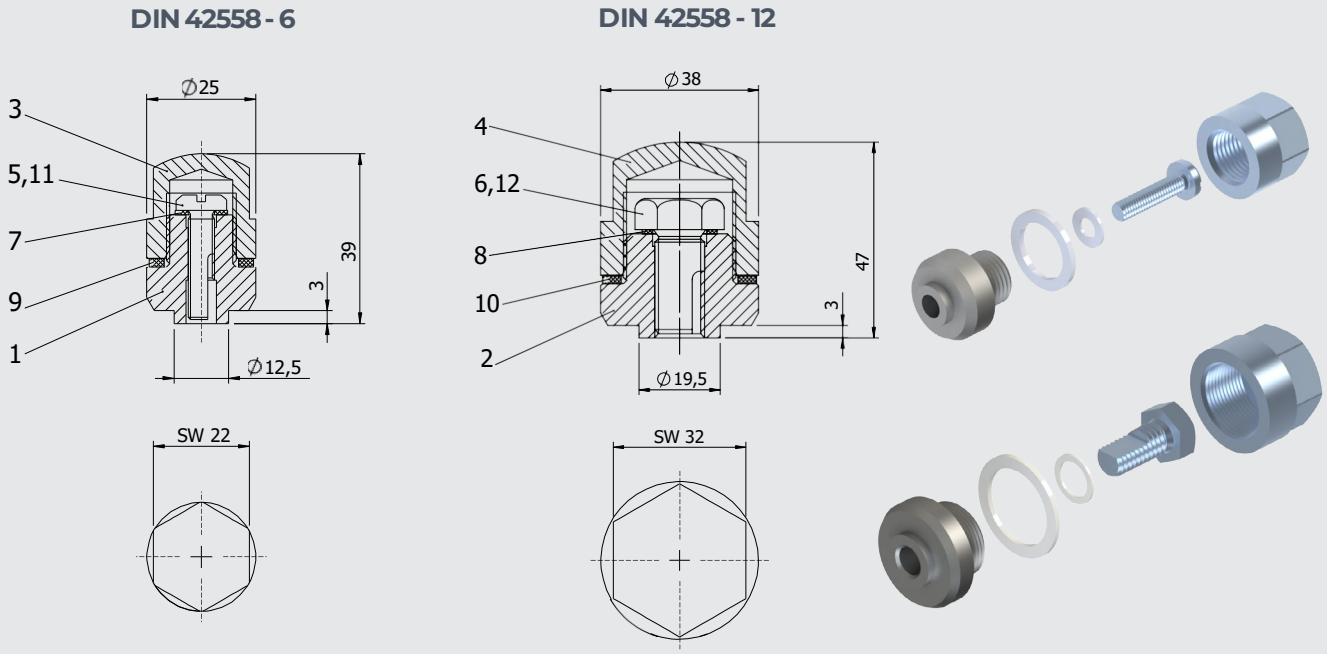

42558 - 6 for air vent
42558 - 6 A for oil drain

42558 - 12 for air vent
42558 - 12 A for oil drain

Item	Q´ty				Descriptions	Remarks
	6	6 A	12	12 A		
1	1	1	-	-	*socket*	S235JR (1.0037)*
2	-	-	1	1	*socket*	S235JR (1.0037)*
3	1	1	-	-	*cap nut*	M 16 x 1,5 / galv. Zn. (Cr-VI free)*
4	-	-	1	1	*cap nut*	M 27 x 1,5 / galv. Zn. (Cr-VI free)*
5	1	-	-	-	*air vent screw*	M 6 x 25 / galv. Zn. (Cr-VI free) / *milled***
6	-	-	1	-	*air vent screw*	M 12 x 25 / galv. Zn. (Cr-VI free) / *milled***
7	1	1	-	-	*gasket*	PA 6 / 6,6 x 12,5
8	-	-	1	1	*gasket*	PA 6 / 12,2 x 20
9	1	1	-	-	*gasket*	PA 6 / 16,2 x 24
10	-	-	1	1	*gasket*	PA 6 / 27,3 x 37
11	-	1	-	-	*screw*	DIN 85 M 6 x 25 / galv. Zn. (Cr-VI free)**
12	-	-	-	1	hex *screw*	DIN 933 M 12 x 25 / galv. Zn. (Cr-VI free)**

*Optional | upon request: X2CrNiMo17-12-2 (1.4404) / AISI 316L ; X2CrNiMoN22-5-3 1.4462 AISI 318 LN

**Optional | upon request: A2-70 / A4-70

MUSTAFA KEMAL MAH. DUMLUPINAR BUL.
NO: 266A İÇ KAPI NO: 18 ÇANKAYA / ANKARA

https://www.ktcelektrik.com.tr/